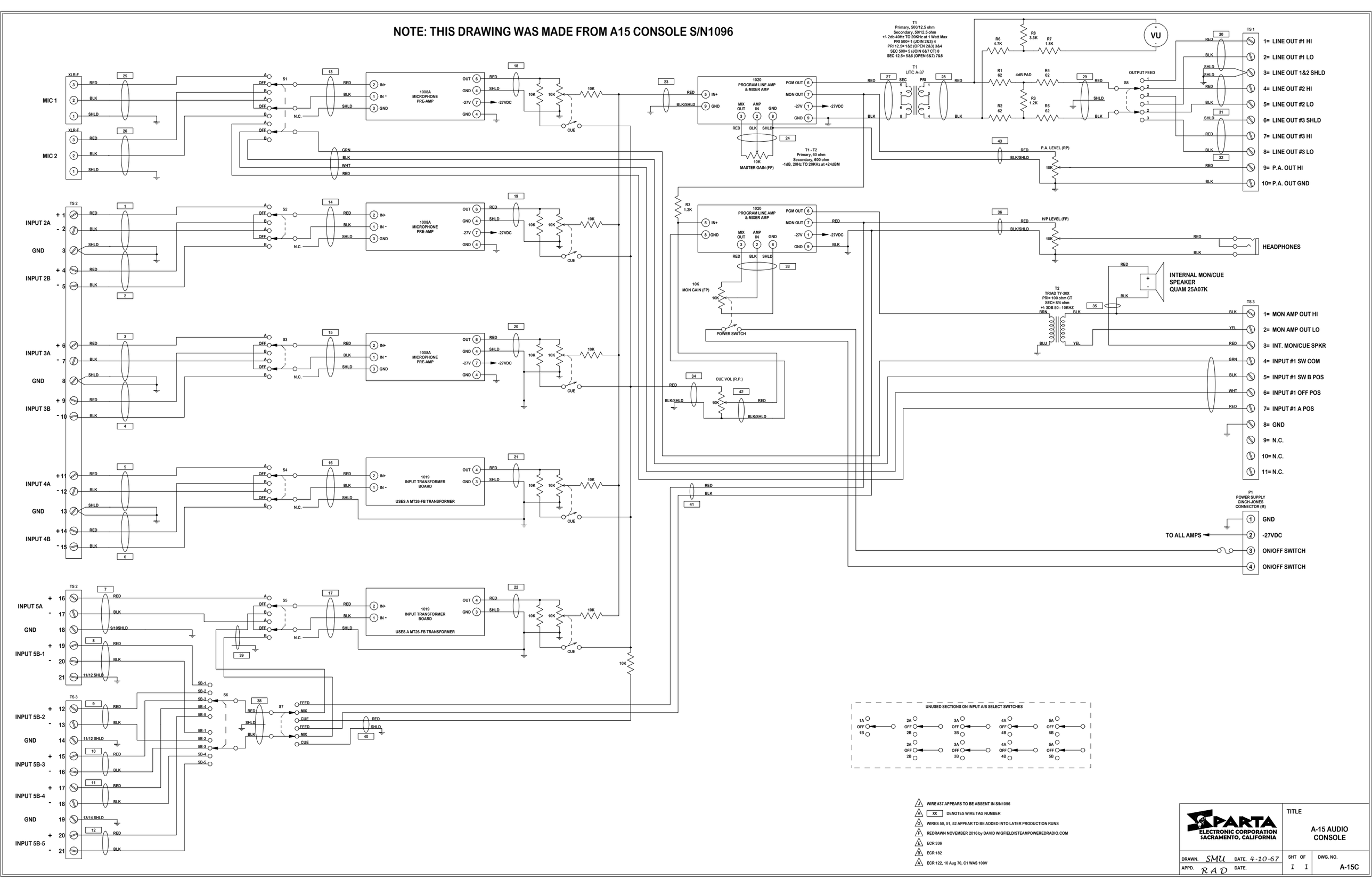
NOTE: THIS DRAWING WAS MADE FROM A15 CONSOLE S/N1096
MIC 1
MIC 2
INPUT 2A
GND
INPUT 2B
INPUT 3A
GND
INPUT 3B
INPUT 4A
GND
INPUT 4B
INPUT 5A
GND
INPUT 5B-1
INPUT 5B-2
GND
INPUT 5B-3
INPUT 5B-4
GND
INPUT 5B-5
1008A MICROPHONE PRE-AMP
1019 INPUT TRANSFORMER BOARD
USES A MT26-FB TRANSFORMER
1020 PROGRAM LINE AMP & MIXER AMP
MASTER GAIN (FP)
MON GAIN (FP)
POWER SWITCH
CUE VOL (R.P.)
T1 - T2
Primary, 60 ohm
Secondary, 600 ohm
-1dB, 20Hz TO 20KHz at +24dBM
T1
Primary, 500/12.5 ohm
Secondary, 50/12.5 ohm
+/- 2db 40Hz TO 20KHz at 1 Watt Max
PRI 500= 1 (JOIN 2&3) 4
PRI 12.5= 1&2 (OPEN 2&3) 3&4
SEC 500= 5 (JOIN 6&7 CT) 8
SEC 12.5= 5&6 (OPEN 6&7) 7&8
T1
UTC A-37
4dB PAD
OUTPUT FEED
P.A. LEVEL (RP)
H/P LEVEL (FP)
HEADPHONES
INTERNAL MON/CUE SPEAKER QUAM 25A07K
T2
TRIAD TY-30X
PRI= 100 ohm CT
SEC= 8/4 ohm
+/- 3DB 50 - 10KHZ
VU
TS 1
1= LINE OUT #1 HI
2= LINE OUT #1 LO
3= LINE OUT 1&2 SHLD
4= LINE OUT #2 HI
5= LINE OUT #2 LO
6= LINE OUT #3 SHLD
7= LINE OUT #3 HI
8= LINE OUT #3 LO
9= P.A. OUT HI
10= P.A. OUT GND
TS 3
1= MON AMP OUT HI
2= MON AMP OUT LO
3= INT. MON/CUE SPKR
4= INPUT #1 SW COM
5= INPUT #1 SW B POS
6= INPUT #1 OFF POS
7= INPUT #1 A POS
8= GND
9= N.C.
10= N.C.
11= N.C.
P1
POWER SUPPLY CINCH-JONES CONNECTOR (M)
TO ALL AMPS
GND
-27VDC
ON/OFF SWITCH
ON/OFF SWITCH
UNUSED SECTIONS ON INPUT A/B SELECT SWITCHES
J WIRE #37 APPEARS TO BE ABSENT IN S/N1096
H XX DENOTES WIRE TAG NUMBER
G WIRES 50, 51, 52 APPEAR TO BE ADDED INTO LATER PRODUCTION RUNS
F REDRAWN NOVEMBER 2016 by DAVID WIGFIELD/STEAMPOWEREDRADIO.COM
E ECR 336
B ECR 182
A ECR 122, 10 Aug 70, C1 WAS 100V
SPARTA ELECTRONIC CORPORATION SACRAMENTO, CALIFORNIA
TITLE
A-15 AUDIO CONSOLE
DRAWN. SMU DATE. 4-10-67
APPD. RAD DATE.
SHT 1 OF 1
DWG. NO. A-15C